Water Multi Coupling For
European Plug Profile

rtc®
COUPLING TECHNOLOGY

Water | Pneumatic | Hydraulic | Electrical | Accessories

M090

rtc TYPE

rtc Multicoupling systems
rtc Multikupplungssysteme type M090

All rights are reserved by rtc to modify product specifications without any prior announcement.

rtc Multicoupling systems / rtc Multikupplungssysteme type M090

Type	Max.Working Pressure Max. Betriebsdruck	Flow size Nennweite	Connections Anschlüsse	Circuits Kreislauf
rtc M090.09	16 bar	09	6 / 8 / 10 / 12 / 16 / 20 / 24	3 / 4 / 5 / 6 / 8 / 10 / 12

Temperature Range - Temperaturbereich
For oil / bei Öl -10°C +200°C (+14°F +392°F) FPM (V)
For water / bei Wasser -10°C +160°C (+14°F +320°F) FPM (V)

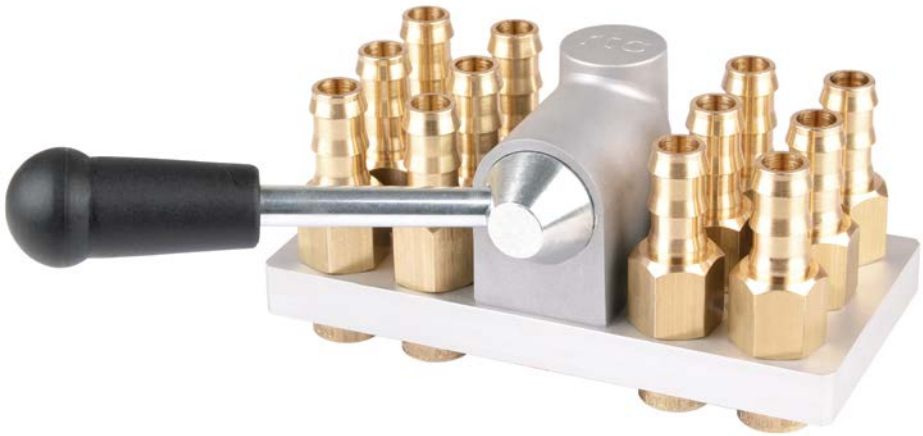

Specification
Connectiing and disconnecting the circuits in one operation for quick mold change

Colour coded plates for circuit definition

Eigenschaften
Verbinden und Trennen von mehreren Kreisläufen in einem Arbeitsgang für das schnelle Rüsten

Kennzeichnung von Zu- und Rücklauf durch farbige Platten

Applications
Aluminium die casting
Test units
Plastics industry / cooling heating

Anwendungen
Aluminiumdruckguß
Prüfstände
Kunstsoffindustrie / Mehrkreistemperierung / Kühlen Temperieren

All rights are reserved by rtc to modify product specifications without any prior announcement.

rtc TYPE M 090.09 — Flow diameter 9 mm / Nennweite 9 mm

TYPE M 090.09 — Mobile side / Versorgerseite

3 ⇄ 3

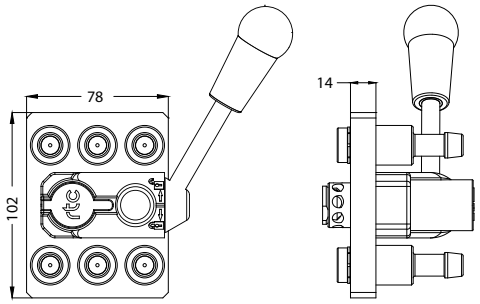

			Item code / Artikelnummer
Standard hose Schlauchanschluss		Ø10 Ø12	M 090.09-06 SHB 10 M 090.09-06 SHB 12
	(Full flow)	Ø10 Ø12	M 090.09-06 SHF 10 M 090.09-06 SHF 12

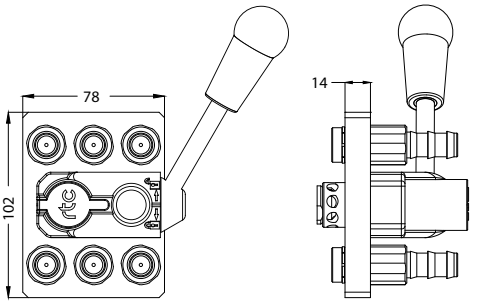

Push to connect Steckschlauchanschluss		Ø10 Ø13	M 090.09-06 SPB 10 M 090.09-06 SPB 13
	(Full flow)	Ø10 Ø13	M 090.09-06 SPF 10 M 090.09-06 SPF 13

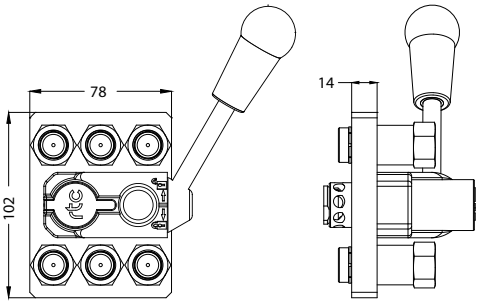

Female thread Innengewinde		BSP 3/8 NPT 3/8	M 090.09-06 SFB 17 M 090.09-06 SNB 17
	(Full flow)	BSP 3/8 NPT 3/8	M 090.09-06 SFF 17 M 090.09-06 SNF 17

TYPE K 090.09 — Mould side / Abnehmerseite

3 ⇄ 3

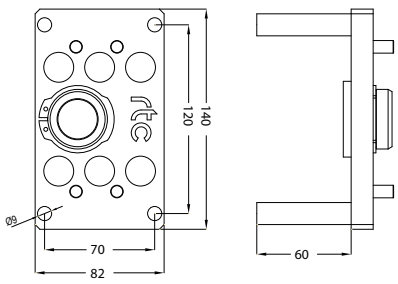

	Item code / Artikelnummer
Plate for 6 lines / Platte für 6 Anschlüsse	K 090.09-06

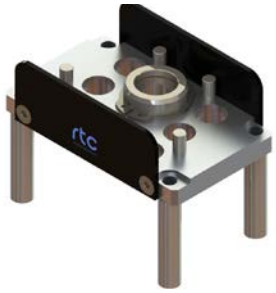

All rights are reserved by rtc to modify product specifications without any prior announcement.

Flow diameter 9 mm / Nennweite 9 mm

TYPE **M 090.09** rtc

TYPE **M 090.09**	Mobile side / Versorgerseite			Item code / Artikelnummer
4 ⇄ 4	Standard hose Schlauchanschluss		Ø10 Ø12	M 090.09-08 SHB 10 M 090.09-08 SHB 12
		(Full flow)	Ø10 Ø12	M 090.09-08 SHF 10 M 090.09-08 SHF 12
	Push to connect Steckschlauchanschluss		Ø10 Ø13	M 090.09-08 SPB 10 M 090.09-08 SPB 13
		(Full flow)	Ø10 Ø13	M 090.09-08 SPF 10 M 090.09-08 SPF 13
	Female thread Innengewinde		BSP 3/8 NPT 3/8	M 090.09-08 SFB 17 M 090.09-08 SNB 17
		(Full flow)	BSP 3/8 NPT 3/8	M 090.09-08 SFF 17 M 090.09-08 SNF 17

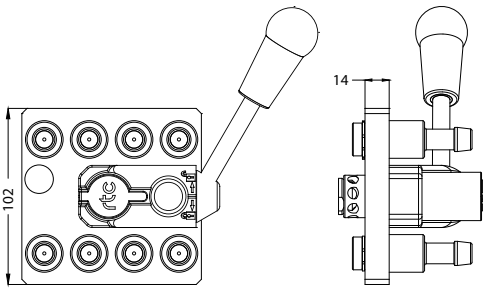

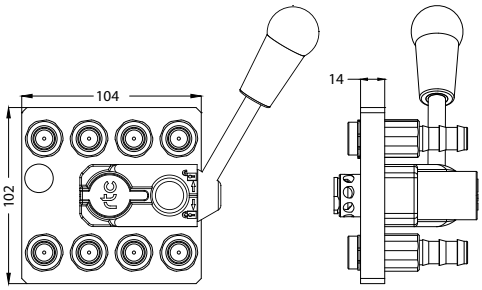

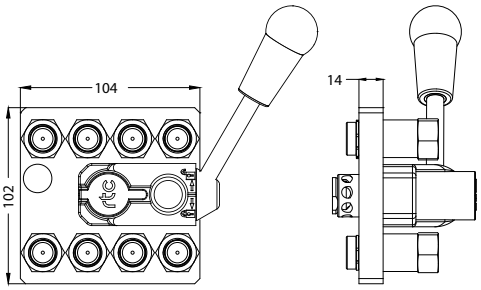

TYPE **K 090.09**	Mould side / Abnehmerseite	Item code / Artikelnummer
4 ⇄ 4	Plate for 8 lines / Platte für 8 Anschlüsse	K 090.09-08

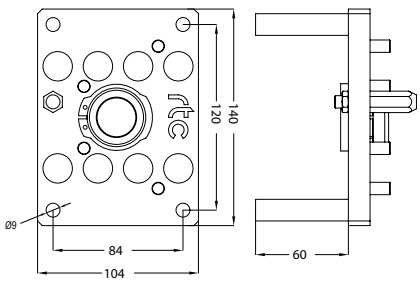

All rights are reserved by rtc to modify product specifications without any prior announcement.

rtc TYPE M 090.09 — Flow diameter 9 mm / Nennweite 9 mm

TYPE M 090.09 — Mobile side / Versorgerseite

5 ⇄ 5

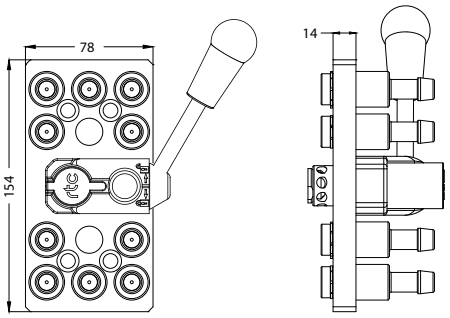

			Item code / Artikelnummer
Standard hose Schlauchanschluss		Ø10 Ø12	M 090.09-10 SHB 10 M 090.09-10 SHB 12
	(Full flow)	Ø10 Ø12	M 090.09-10 SHF 10 M 090.09-10 SHF 12

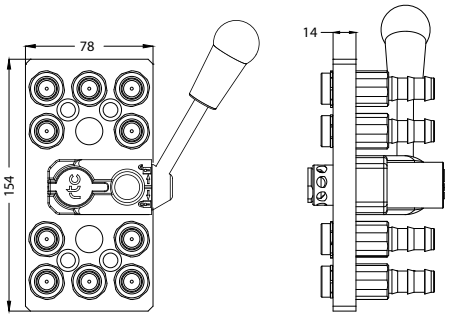

Push to connect Steckschlauchanschluss		Ø10 Ø13	M 090.09-10 SPB 10 M 090.09-10 SPB 13
	(Full flow)	Ø10 Ø13	M 090.09-10 SPF 10 M 090.09-10 SPF 13

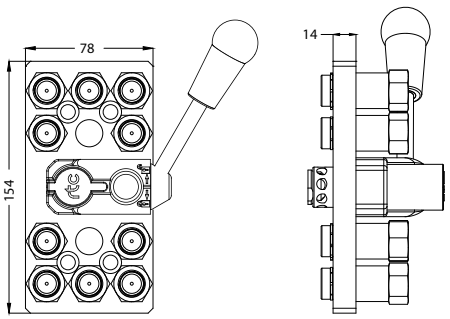

Female thread Innengewinde		BSP 3/8 NPT 3/8	M 090.09-10 SFB 17 M 090.09-10 SNB 17
	(Full flow)	BSP 3/8 NPT 3/8	M 090.09-10 SFF 17 M 090.09-10 SNF 17

TYPE K 090.09 — Mould side / Abnehmerseite

5 ⇄ 5

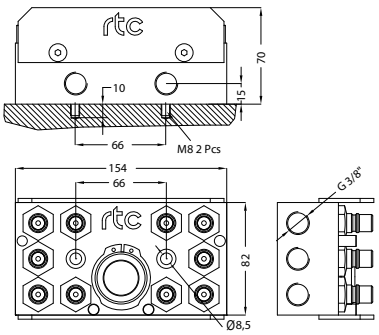

			Item code / Artikelnummer
Plate with 10 plugs Platte mit 10 Anschlüsse		BSP 3/8	K 090.09-10 PMB 17
	(Full flow)	BSP 3/8	K 090.09-10 PMF 17

All rights are reserved by rtc to modify product specifications without any prior announcement.

Flow diameter 9 mm / Nennweite 9 mm

TYPE **M 090.09** rtc

TYPE **M 090.09**	Mobile side / Versorgerseite			Item code / Artikelnummer
6 ⇄ 6	Standard hose Schlauchanschluss		Ø10 Ø12	M 090.09-12 SHB 10 M 090.09-12 SHB 12
		(Full flow)	Ø10 Ø12	M 090.09-12 SHF 10 M 090.09-12 SHF 12
	Push to connect Steckschlauchanschluss		Ø10 Ø13	M 090.09-12 SPB 10 M 090.09-12 SPB 13
		(Full flow)	Ø10 Ø13	M 090.09-12 SPF 10 M 090.09-12 SPF 13
	Female thread Innengewinde		BSP 3/8 NPT 3/8	M 090.09-12 SFB 17 M 090.09-12 SNB 17
		(Full flow)	BSP 3/8 NPT 3/8	M 090.09-12 SFF 17 M 090.09-12 SNF 17
	Female thread collector Innengewinde Sammler		BSP 1 NPT 1	M 090.09-12 C 33 M 090.09-12 CN 33

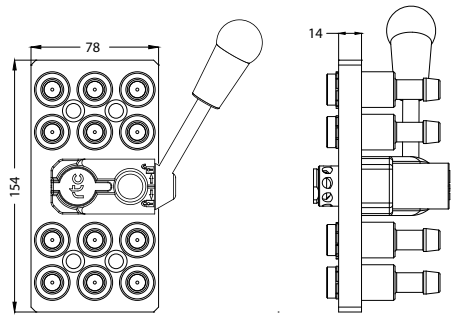

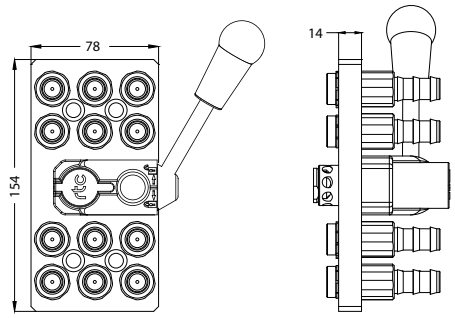

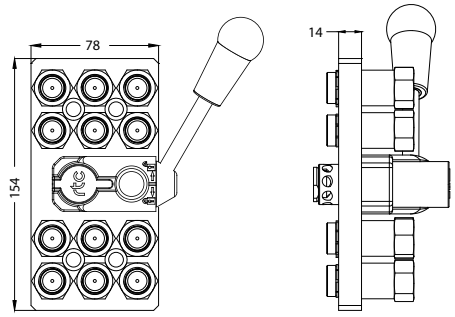

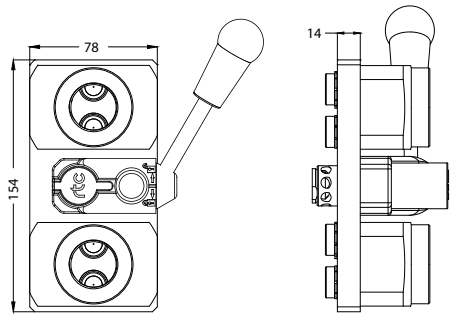

TYPE **K 090.09**	Mould side / Abnehmerseite		Item code / Artikelnummer
6 ⇄ 6	K 090.09-12 AD	Plate for 12 lines / Platte mit 12 Anschlüsse	K 090.09-12

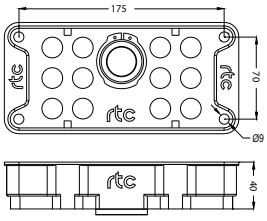

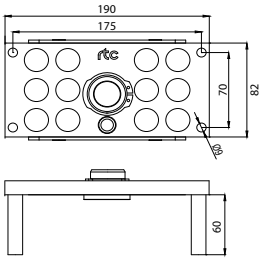

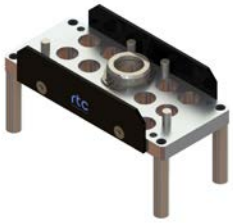

All rights are reserved by rtc to modify product specifications without any prior announcement.

rtc TYPE M 090.09 — Flow diameter 9 mm / Nennweite 9 mm

TYPE M 090.09 — Mobile side / Versorgerseite

8 ⇄ 8

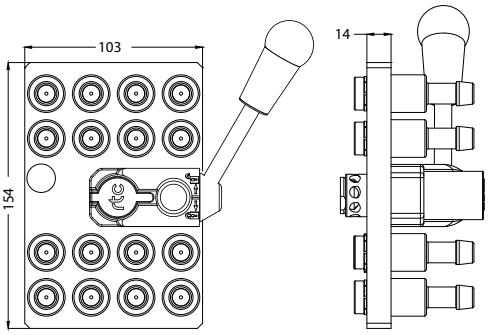

		Item code / Artikelnummer
Standard hose Schlauchanschluss	Ø10 Ø12	M 090.09-16 SHB 10 M 090.09-16 SHB 12
	(Full flow) Ø10 Ø12	M 090.09-16 SHF 10 M 090.09-16 SHF 12

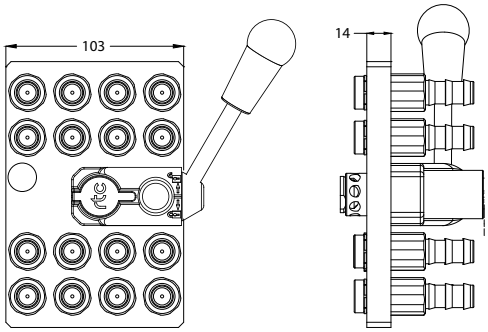

Push to connect Steckschlauchanschluss	Ø10 Ø13	M 090.09-16 SPB 10 M 090.09-16 SPB 13
	(Full flow) Ø10 Ø13	M 090.09-16 SPF 10 M 090.09-16 SPF 13

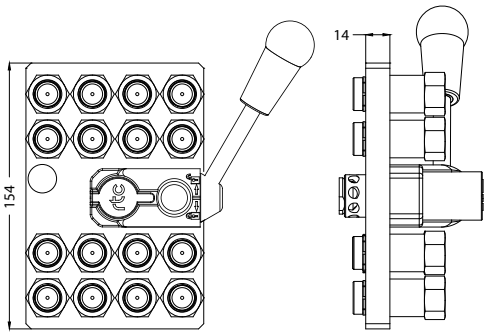

Female thread Innengewinde	BSP 3/8 NPT 3/8	M 090.09-16 SFB 17 M 090.09-16 SNB 17
	(Full flow) BSP 3/8 NPT 3/8	M 090.09-16 SFF 17 M 090.09-16 SNF 17

TYPE K 090.09 — Mould side / Abnehmerseite

8 ⇄ 8

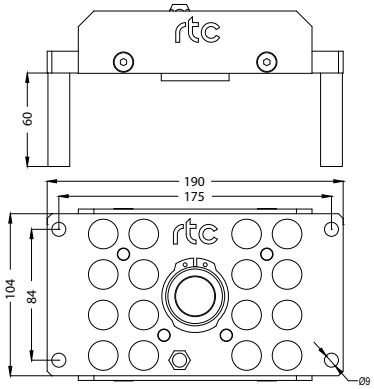

	Item code / Artikelnummer
Plate for 16 lines / Platte für 16 Anschlüsse	K 090.09-16

All rights are reserved by rtc to modify product specifications without any prior announcement.

Flow diameter 9 mm / Nennweite 9 mm

TYPE **M 090.09**

TYPE **M 090.09**	Mobile side / Versorgerseite			Item code / Artikelnummer
10 ⇄ 10	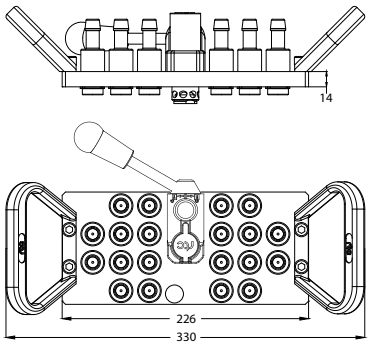	Standard hose Schlauchanschluss	Ø10 Ø12	M 090.09-20 SHB 10 M 090.09-20 SHB 12
			(Full flow) Ø10 Ø12	M 090.09-20 SHF 10 M 090.09-20 SHF 12
	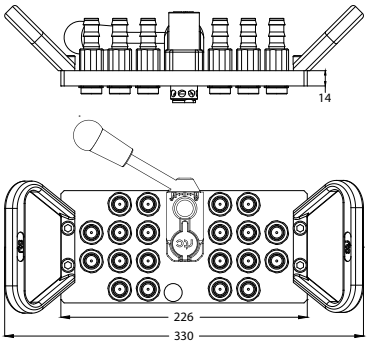	Push to connect Steckschlauchanschluss	Ø10 Ø13	M 090.09-20 SPB 10 M 090.09-20 SPB 13
			(Full flow) Ø10 Ø13	M 090.09-20 SPF 10 M 090.09-20 SPF 13
	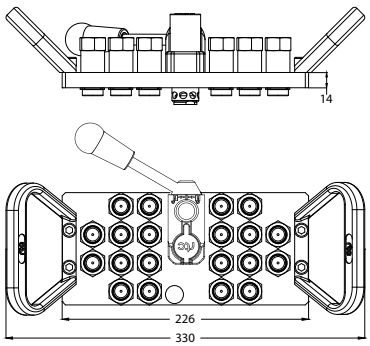	Female thread Innengewinde	BSP 3/8 NPT 3/8	M 090.09-20 SFB 17 M 090.09-20 SNB 17
			(Full flow) BSP 3/8 NPT 3/8	M 090.09-20 SFF 17 M 090.09-20 SNF 17
	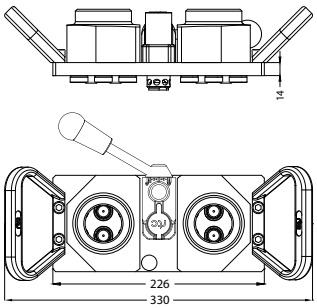	Female thread collector Innengewinde Sammler	BSP 1.1/4 NPT 1.1/4	M 090.09-20 C 42 M 090.09-20 CN 42

TYPE **K 090.09**

TYPE **K 090.09**	Mould side / Abnehmerseite		Item code / Artikelnummer
10 ⇄ 10	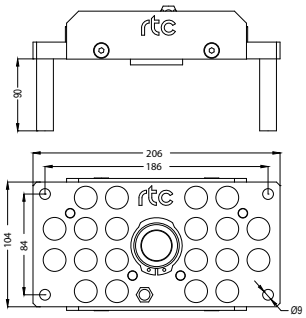	Plate for 20 lines / Platte für 20 Anschlüsse	K 090.09-20

All rights are reserved by rtc to modify product specifications without any prior announcement.

rtc TYPE M 090.09 — Flow diameter 9 mm / Nennweite 9 mm

TYPE M 090.09	Mobile side / Versorgerseite			Item code / Artikelnummer
12 ⇄ 12	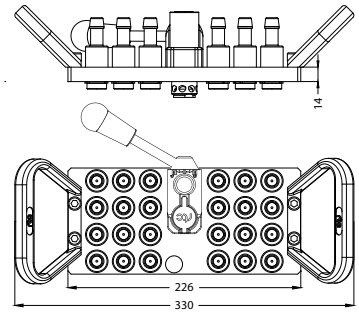	Standard hose Schlauchanschluss	Ø10 Ø12	M 090.09-24 SHB 10 M 090.09-24 SHB 12
			(Full flow) Ø10 Ø12	M 090.09-24 SHF 10 M 090.09-24 SHF 12
	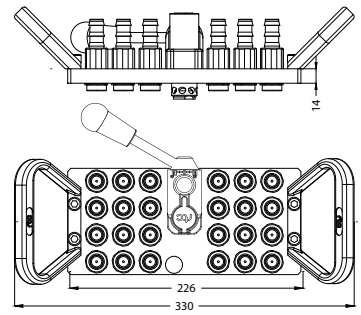	Push to connect Steckschlauchanschluss	Ø10 Ø13	M 090.09-24 SPB 10 M 090.09-24 SPB 13
			(Full flow) Ø10 Ø13	M 090.09-24 SPF 10 M 090.09-24 SPF 13
	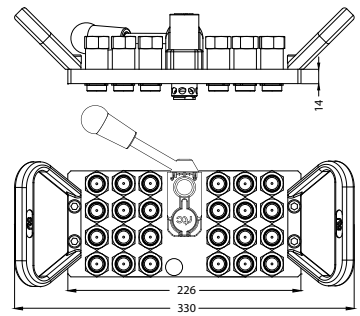	Female thread Innengewinde	BSP 3/8 NPT 3/8	M 090.09-24 SFB 17 M 090.09-24 SNB 17
			(Full flow) BSP 3/8 NPT 3/8	M 090.09-24 SFF 17 M 090.09-24 SNF 17
	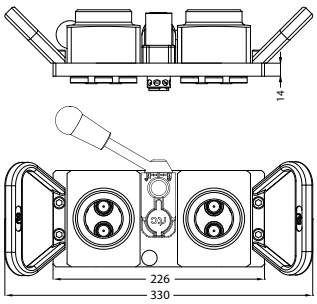	Female thread collector Innengewinde Sammler	BSP 1-1/4 NPT 1-1/4	M 090.09-24 C 42 M 090.09-24 CN 42

TYPE K 090.09	Mould side / Abnehmerseite		Item code / Artikelnummer
12 ⇄ 12	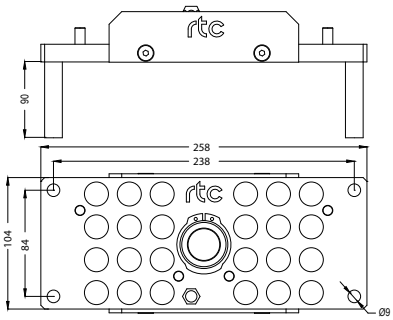	Plate for 24 lines / Platte für 24 Anschlüsse	K 090.09-24

All rights are reserved by rtc to modify product specifications without any prior announcement.

Flow diameter 9 mm / Nennweite 9 mm — TYPE M 090.09

TYPE M 090.09	Sockets / Kupplungen		Connection / Anchluss	Item code / Artikelnummer
	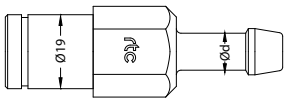	Standard hose Schlauchanschluss	Ø10 Ø12	M 090.09 SHB 10 M 090.09 SHB 12
			(Full flow) Ø10 Ø12	M 090.09 SHF 10 M 090.09 SHF 12
	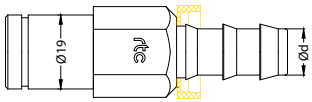	Push to connect Steckschlauchanschluss	Ø10 Ø13	M 090.09 SPB 10 M 090.09 SPB 13
			(Full flow) Ø10 Ø13	M 090.09 SPF 10 M 090.09 SPF 13
	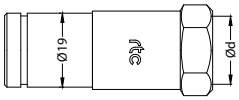	Female thread Innengewinde	BSP 3/8 NPT 3/8	M 090.09 SFB 17 M 090.09 SNB 17
			(Full flow) BSP 3/8 NPT 3/8	M 090.09 SFF 17 M 090.09 SNF 17
	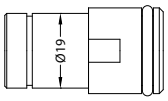	For collector Für Sammler		M 090.09 SAB 00

TYPE M 090.09	Plugs / Nippel		Connection / Anchluss	Item code / Artikelnummer
	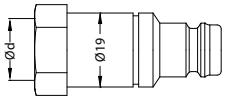	Female thread Innengewinde	BSP 3/8 NPT 3/8	M 090.09 PFB 17 M 090.09 PNB 17
			(Full flow) BSP 3/8 NPT 3/8	M 090.09 PFF 17 M 090.09 PNF 17

TYPE M 090.09	Adapters elbow / Adapter Winkel		Connection / Anchluss	Item code / Artikelnummer
	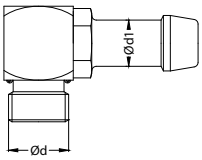	Standard hose Schlauchanschluss	BSP 3/8 → Ø10 Ø12	EBH 17/10-90 EBH 17/12-90
			NPT 3/8 → Ø10 Ø12	EBH 17T/10-90 EBH 17T/12-90
	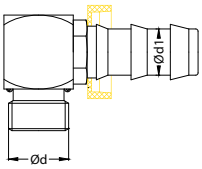	Push to connect Steckschlauchanschluss	BSP 3/8 → Ø10 Ø13	EBP 17/10-90 EBP 17/13-90
			NPT 3/8 → Ø10 Ø13	EBP 17T/10-90 EBP 17T/13-90
	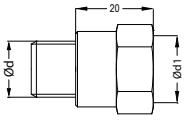	TE 17-20 BSP 3/8" Male (Ød) - BSP 3/8" Female (Ød1) Extention BSP 3/8" Aussengewinde (Ød) - BSP 3/8" Innengewinde (Ød1) Verlängerung TE 17-17N-20 BSP 3/8" Male (Ød) - NPT 3/8" Female (Ød1) Extention BSP 3/8" Aussengewinde (Ød) - NPT 3/8" Innengewinde (Ød1) Verlängerung TE 17T-17N-20 NPT 3/8" Male (Ød) - NPT 3/8" Female (Ød1) Extention NPT 3/8" Aussengewinde (Ød) - NPT 3/8" Innengewinde (Ød1) Verlängerung		

All rights are reserved by rtc to modify product specifications without any prior announcement.